Front view

Master module for industrial compressor racks with Modbus connection

Features

- Simple start-up through parameter setting of the plants with presettings from the expert database
- Connection of 12 compound field modules
- Control of 16 compressors (depending on compressor type, field module type and operating mode)
- Compressor control according to COP
- Differentiation of unused sensors and faulty sensors
- Control circuits:
  - Suction pressure or secondary refrigerant control
  - Condenser control
  - Control for the secondary refrigerant pumps
  - Control of electronic expansion valves
  - Free cooler
  - Monitoring of an individual system
- Control process:
  - Standard multiple contact switch with base load change
  - Master-slave for reducing switching cycles in industrial systems
  - Compressor control with frequency converter
  - Standard with variable delay times
  - Frigotakt+
- Integrated relay outputs
- CAN bus connection via patch cable and push-in terminals
- Multilingual menu prompting (DE/EN/FR/NL)
- Connection to the Wurm system through a Wurm CAN communication bus (C-BUS) and FRIGODATA XP
- High level of safety thanks to the galvanically isolated Wurm CAN field bus (F-BUS) used to connect the field modules

Writing conventions

Symbol	Meaning
⚠ **CAUTION!**	Avoid the described hazard: otherwise **minor** or **medium** physical injury or damage to property will result.
⚠ **WARNING!**	Avoid the described hazard: otherwise there is danger from **electric voltage** that could lead to death or **serious** physical injury.

For your safety

For safe operation and to avoid personal injury and equipment damage through operating error, always read these instructions, become familiar with the device, and follow all safety instructions on the product and in this document, as well as the safety guidelines of Wurm GmbH & Co. KG Elektronische Systeme. Keep these instructions ready to hand for quick reference and pass them on with the device if the product is sold.
Wurm GmbH & Co. KG Elektronische Systeme accepts no liability in case of improper use or use for other than the intended purpose.

Target group	These instructions are intended for "service technicians".
Intended use	The HVI-G3 is a master module for industrial compressor racks with Modbus connection.

⚠ **WARNING!**

Danger to life from electric shock and/or fire!

- Switch off the power to the entire plant when installing, wiring or removing! Otherwise a mains voltage and/or external voltage may still be present even if the control voltage is switched off!
- The wiring of the device should be carried out only by a qualified electrician!
- Use only the correct tools for all work!
- Check all wiring after connection!
- Take note of the maximum loads on all connections!
- Never expose the device to moisture, for example due to condensation or cleaning agents!
- Take the device out of operation if it is faulty or damaged and is therefore compromising safe operation!
- Do not open the device!
- Do not repair the device yourself! If required, send it in for repair with an exact description of the fault!

⚠ **CAUTION!**

Electromagnetic interference can cause faults!

- Use only shielded data lines and place them far away from power lines!

Software revision and validity of documentation

Software version		
V8.0.1	2018-01	Documentation status

Any software versions not listed are special solutions for individual projects and are not described in detail in this document. This document automatically ceases to be valid if a new technical description is issued.

Manufacturer: Wurm GmbH & Co. KG Elektronische Systeme, Morsbachtalstraße 30, D-42857 Remscheid
For further information, see our website at www.wurm.de

Circuit diagram

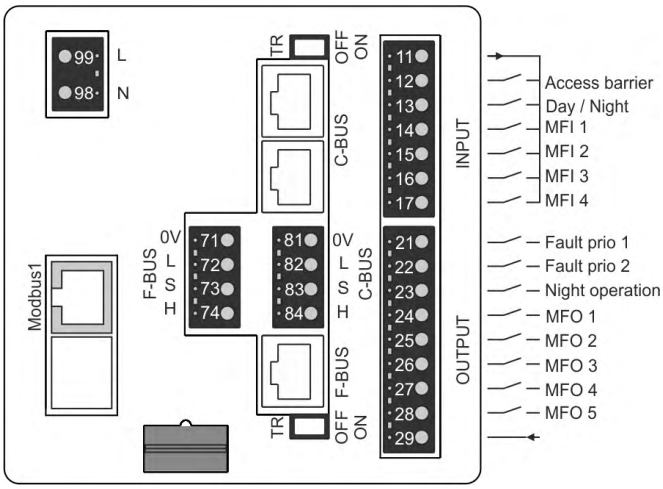

Installing

⚠	**WARNING! Danger to life from electric shock and/or fire!** ▪ Switch off the power to the entire plant before installing! Otherwise, a mains voltage and/or external voltage may still be present even if the control voltage is switched off.

Installation in the MGR

Installation in the installation frame MGR131/141 and MGR231/241

Push the device in the installation frame to the stop until it locks between the spring clips.

ℹ	**Note!** • Please note the product information for the installation frame MGR131/141 and MGR231/241.

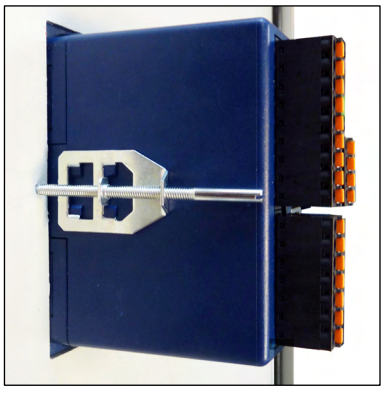

Installation with ZEM

Individual installation with screw clamps of the ZEM type

Insert the device up to the stop in a section of a switching cabinet door. Then fix the device with screw clamps of the ZEM type to the switching cabinet door.

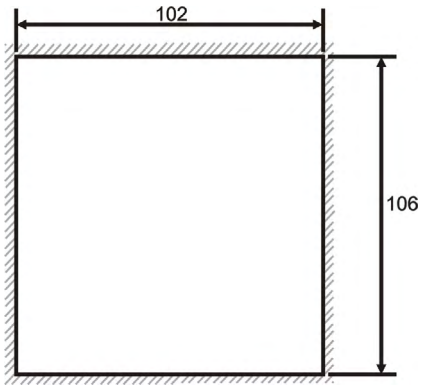

Installation section for individual installation

Wiring and connection of several master modules

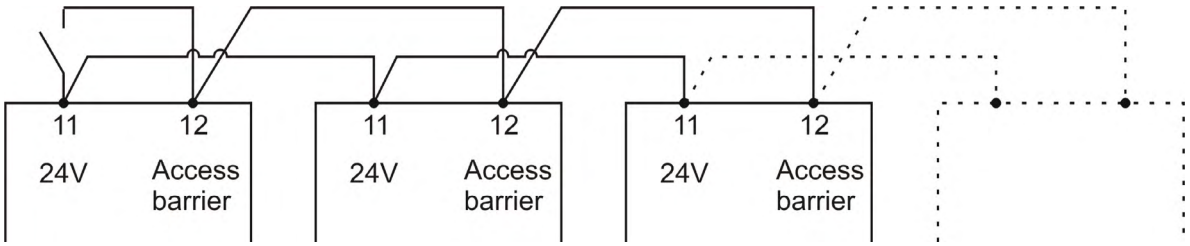

Technical data

Power supply	230V~, +10% / -15%, 50Hz, max. 13VA
Display	Graphical display with backlighting 4 x yellow LED, menu selection 1 x red LED, flashing in case of fault 1 x yellow LED, for operating status of C-BUS 1 x yellow LED, for operating status of F-BUS
Communication C-BUS	3-wire CAN bus interface, shielded, galvanically isolated, 2.5mm² push-in terminals / RJ45 socket and switchable terminating resistor for communication with system devices
Communication F-BUS	3-wire CAN bus interface, shielded, galvanically isolated, 2.5mm² push-in terminals / RJ45 socket and switchable terminating resistor for communication with field modules
Modbus communication	3-wire Modbus RTU, galvanically isolated, RJ45 socket
Digital inputs	6 x 24V=, self-powered, approx. 5mA per input, push-in terminals 2.5mm²
Digital outputs	8 x normally open contact with common supply, 1A, rated voltage 230V~, push-in terminals 2.5mm²
Dimensions	(WxHxD) 109 x 109 x 92mm
Housing	Plastic, foil
Fastening	In MGR installation frame, individual installation with ZEM
Ambient temperature	Operation: 0...+55°C, storage: -25...+70°C
Weight	About 650g
CE conformity	– 2014/30/EU (EMC Directive) – 2014/35/EU (Low Voltage Directive) CE
EAC conformity	– TR CU 004/2011 – TR CU 020/2011 EAC
	RoHS II
Valid from	Version 8.0.1